FCIconnect.com

| PRODUCT NUMBER | PITCH |
|---|---|
| TSxxA1xB00J0G | 7.50 mm |

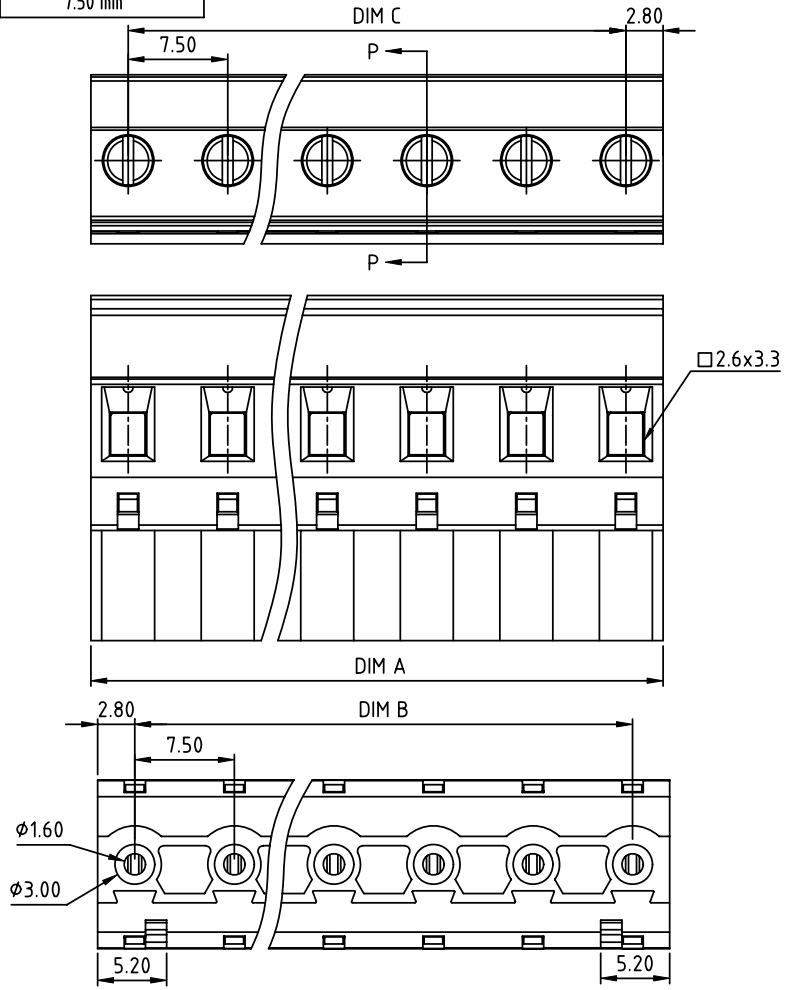


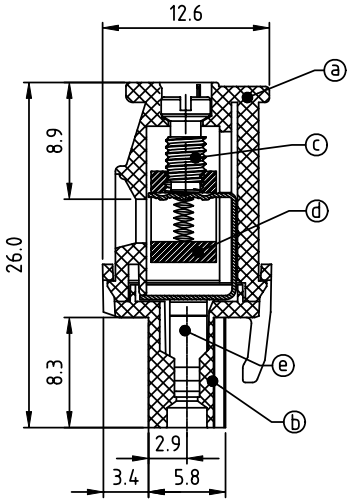


SETION P-P

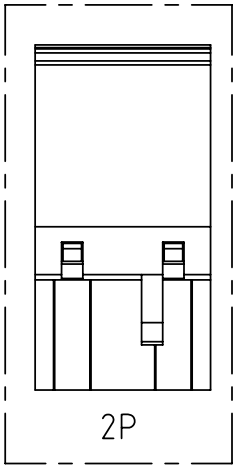


## Material

- Item ⓐ Top body:Thermoplastic ( UL94V-0 )
- Item ⓑ Bottom body:Thermoplastic ( UL94V-0 )
- Item ⓒ Terminal screw:Steel Zinc plating "-" slot type
- Item ⓓ Clamp:Brass, Ni plated
- Item ⓔ Female contact:PhBz ( CuSn ) Tin plated

## Electrical cULus/TUV

- Voltage rating: 300VAC/750VAC
- Current rating: 15A/15A
- Wire range:0.2-2.5mm$^2$
- Solid wire(AWG): 12-24
- Stranded wire(AWG): 12-24
- Torque: 3.5 Lb-In 0.4Nm
- Screw: M3
- Wire strip length: 6-7mm
- Withstanding Voltage: 1.6KV/6KV
- Operating temperature: -40°C to +115°C
- Safety Approval: cULus TÜV

Dim A=(N-1)×7.5+5.6
Dim B=(N-1)×7.5
Dim C=(N-1)×7.5
N=Number of poles

| POLES | Tolerance |
|---|---|
| 2p-6p | ±0.20 |
| 7p-11p | ±0.30 |
| 12p-16p | ±0.40 |

PART NO.: TS xx A1 x B 00J0 G

Solid block
No. of poles
02 2 poles
03 3 poles
... ...
16 16 poles

Color
0 Black (RAL9005)
2 Red (RAL3001/D)
3 Orange(RAL2011/P)
4 Yellow(RAL1018/A)
5 Green(RAL6018/T)
6 Blue (RAL5015/A)
8 Grey(RAL7035/D)
9 White(RAL1102)
C Green(RAL6018/U)

RoHS compliant
(lead<4%)
In copper Alloy

| mat'l. code | | | | surface ASME Y14.5 | tolerance ASME Y14.5 | projection | product family TERMINAL BLOCK |
|---|---|---|---|---|---|---|---|
| ltr | ecn no | dr | date | tolerances unless otherwise specified | | | title |
| | | | | angles | linear X.±0.5 / X.X±0.3 / X.XX±0.1 | MM | TERMINAL BLOCK |
| | | | | X°±1° | | scale | PLUGGABLE PLUG,HOOK ON BACK SIDE,WITHOUT FLANGE |
| | | | | dr | EVIN ZHONG 041914 | FCI | dwg no TSxxA1xB00J0G |
| | | | | engr | EVIN ZHONG 041914 | | sheet 1 of 1 |
| | | | | chr | HANKE FENG 041914 | | size A4 |
| | | | | appd | SHI JUN 041914 | | type CUSTOMER Drawing |
| sheet index | revision | A | | | | | |
| | sheet | 1 | | | | | |

form: A4mmXLc

PDS: Rev :A STATUS:Released Printed: Jul 01, 2014