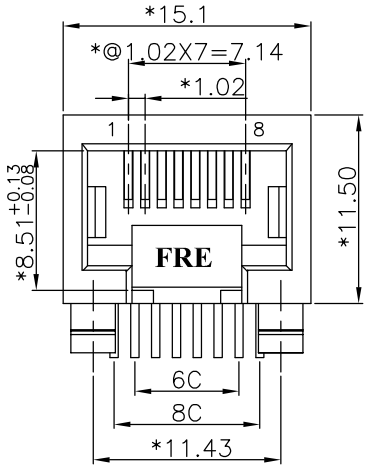

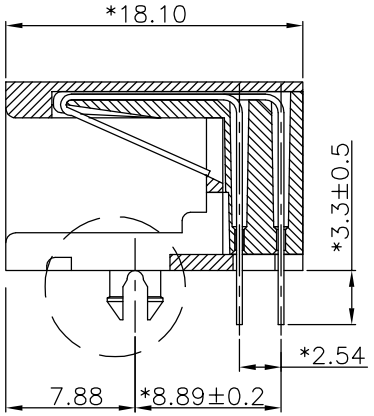

SECTION A–A

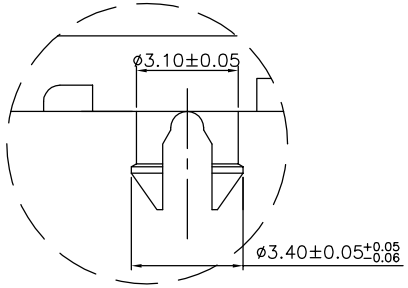

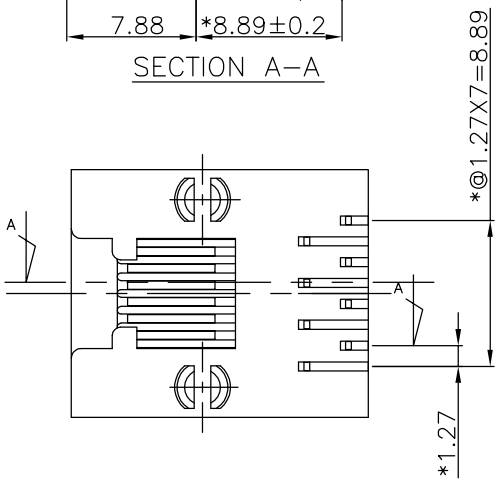

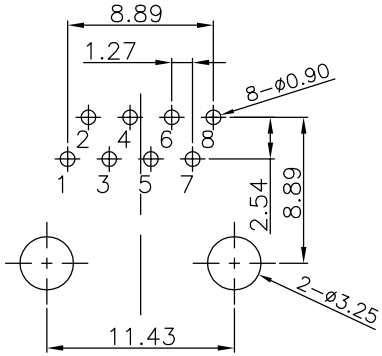

Thickness=1.60mm

PC BOARD LAYOUT COMPONENT SIDE SHOWN

NOTES:

ELECTRICAL:

1. VOLTAGE RATING : 125 VAC RMS.
2. CURRENT RATING : 1.5 AMP.
3. CONTACT RESISTANCE : 35 MILLIOHMS MAX.
4. INSULATION RESISTANCE: 1000 MEGOHMS MIN @ 500 VDC.
5. DIELECTRIC STRENGTH : 1000 VAC RMS 60Hz, 1MIN.

MECHANICAL:

1. HOUSING MATERIAL : GLASS FILLED POLYESTER UL94V–0.
2. CONTACT MATERIAL : PHOSPHOR BRONZE t=0.35mm.
3. PLATING : GOLD PLATING OVER NICKEL.
4. OPERATING LIFE : 750 CYCLES MIN.
5. PCB RETENTION PRE–SOLDER : 1 LB MIN.
6. PCB RETENTION POST–SOLDER: 10 LBS MIN.

ENVIRONMENTAL:

1. STORAGE : −40°C TO +85°C.
2. OPERATION: −40°C TO +85°C.
3. WAVE SOLDERING TEMPERATURE: 230°~250°(3~5 SECONDS)
4. RoHS COMPLIANT.

MATES WITH MODULAR PLUG CONFORMING TO FCC PART 68, SUBPART F.

CUL FILE NO. E163191

PART NUMBER	GOLD PLATING	CONTACTS
E5386–E00212–L	6u"	6
E5388–E00212–L	6u"	8
E5388–E00213–L	15u"	8
E5388–E00214–L	30u"	8

DETACHED LISTS

MM (INCH)

TOLERANCES EXCEPT AS NOTED

MM	
.0 ± 0.2	±
.00 ± 0.15	±
.000 ± 0.075	±

ANGLES ± 0.5

THIRD ANGLE PROJECTION

Pulse A TECHNITROL COMPANY

RoHS Compliant

DFTO Jeri Chi | DATE 06/28/06

SCALE : 3 : 1

FULL RISE ELECTRONIC CO., LTD

TITLE 11.5 SIDE ENTRY 8P FCC DEEP TYPE

DRAWING NO. CE533096–01

/PART NO. SEE NOTES

SIZE A3 | REV 0

DO NOT SCALE DRAWING

SHEET 1 OF 1